techoLED®
BROOKLYN • NY

GEOMETRIC SERIES - GSH

Rev. Date: 11/25/2026

Project:	Type:
	Comments:

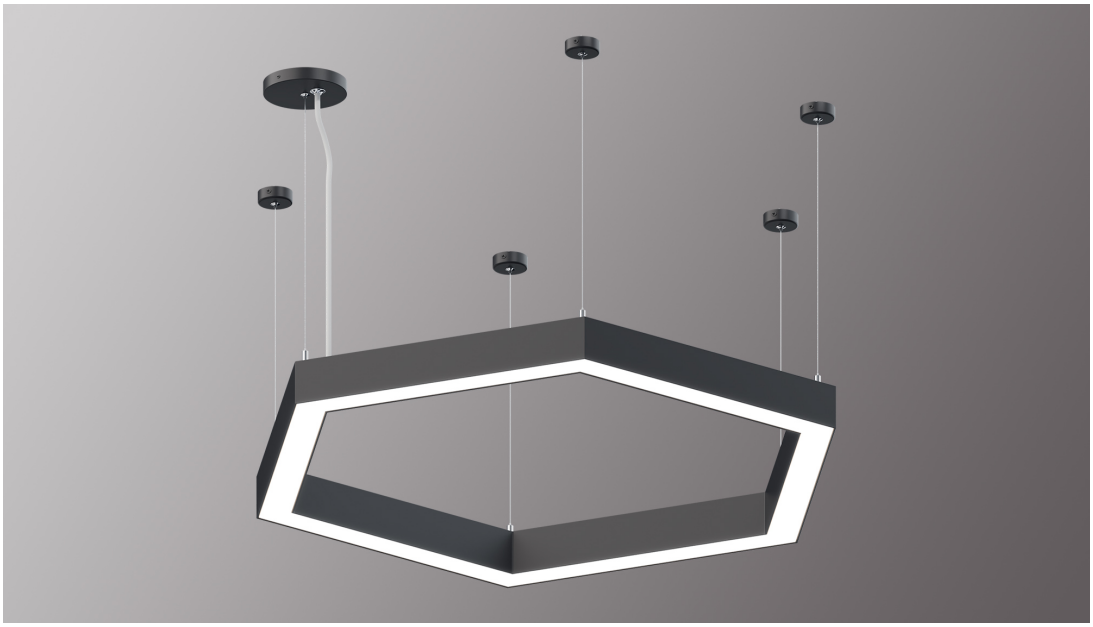

Highlights

The **TechoLED Geometric Series** combines clean geometric forms with versatile LED illumination for modern architectural interiors. Crafted from high grade aluminum, the collection includes circular, rounded square, and hexagonal luminaires in a range of sizes and finishes, from standard colors to custom shades and faux wood. Pendant and surface mounting options, multiple lumen outputs, and a wide selection of color temperatures and controls offer the flexibility to create individual focal points or coordinated lighting arrangements..

LED: Samsung LED chips, 2700-5000K, tunable white and RGB/W, 90CRI

Optical: Direct illumination, 115° Beam Angle

Construction: High grade aluminum extrusion, PMMA diffuser

5-year limited warranty

Installation

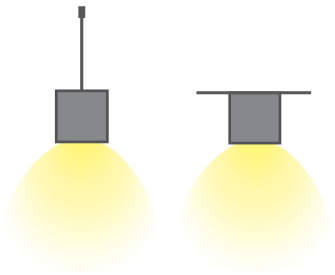

Pendant (P)

Surface Mount (SM)

techoLED®
BROOKLYN • NY

GEOMETRIC SERIES - GSH

Rev. Date: 11/25/2026

Project:	Type:
	Comments:

Configuration Example

Model #	Distribution	Diameter	Lumen Output	Color Temp.	Voltage	Color
TECHOLED-GSH-D-18-LO-30-U-W	Direct	18.9"x16.4"	Low	3000K	110-277V	White

Ordering Guide:

Select one option from each group below. For a custom preference please contact sales@techoled.com

1-FIXTURE ID		2-DISTRIBUTION		3-DIAMETER		4-LUMEN OUTPUT	
GSH	Hexagon G	D	Direct	18	18.9"x16.4"	LO	Low
				23	23.6"x20.5"	ME	Medium
				35	35.4"x30.7"	HI	High
				47	47.2"x40.9"		

5-COLOR TEMP.		6-VOLTAGE		7-FINISH		8-MOUNTING	
27	2700K	U	110-277V	W	White	SM	Surface Mount
30	3000K	HV	347V	B	Black	P	Pendant
35	3500K			C	Custom (RAL#)		
40	4000K						
50	5000K						
DT	Lutron T-series						
RGB	RGB						
RGBW	RGBW						
D	Tunable White						

9-DRIVER OPTIONS		10-OPTIONS		11-OPTIONS (CONT.)	
DM	0-10V Dimming	RF-D	Remote Tunable (RF only)	EM	EM Battery (remote)
2C	2 Channel	RF-R	Remote RGB/W (RF only)	X	None
DM1%	1% Dimming	M	Motion Sensor (remote)		
LT1	LDE1 Lutron 1%	BM	BubblyNet BT Mesh		
CA	Casambi	CS	Casambi		
DMX	DMX	AWNR	Lutron Athena Node		
TR	Triac Dimming	AWNS	Lutron Athena Node sensor		
RF	RF Wireless	NL-ES7	nLight - Wired		
X	None	NL-AIR	nLight - AIR		
		NL-M	nLight - Module only		
		X	None		

techoLED®
BROOKLYN • NY

GEOMETRIC SERIES - GSH

Rev. Date: 11/25/2026

Project:	Type:
	Comments:

Lumen Output Details

Model #	Diameter	Output	Color Temp.	Wattage	Lumen Output
TECHOLED-GSH-D-18-LO-30	18.9"x16.4"	Low	3000K	20W	2100Lm
TECHOLED-GSH-D-18-ME-30	18.9"x16.4"	Medium	3000K	25W	2625Lm
TECHOLED-GSH-D-18-HI-30	18.9"x16.4"	High	3000K	40W	4200Lm
TECHOLED-GSH-D-23-LO-30	23.6"x20.5"	Low	3000K	25W	2625Lm
TECHOLED-GSH-D-23-ME-30	23.6"x20.5"	Medium	3000K	40W	4200Lm
TECHOLED-GSH-D-23-HI-30	23.6"x20.5"	High	3000K	60W	6300Lm
TECHOLED-GSH-D-35-LO-30	35.4"x30.7"	Low	3000K	60W	6300Lm
TECHOLED-GSH-D-35-ME-30	35.4"x30.7"	Medium	3000K	90W	9450Lm
TECHOLED-GSH-D-35-HI-30	35.4"x30.7"	High	3000K	120W	12600Lm
TECHOLED-GSH-D-47-LO-30	47.2"x40.9"	Low	3000K	120W	12600Lm
TECHOLED-GSH-D-47-ME-30	47.2"x40.9"	Medium	3000K	180W	18900Lm
TECHOLED-GSH-D-47-HI-30	47.2"x40.9"	High	3000K	240W	25200Lm

Performance above applies to 90 CRI, 3000K. Calculate 96% for 2700K, 104% for 3500K and 109% for 4000K

Performance

Output	Lumens / W
Low	105
Medium	105
High	105

Project:	Type:
	Comments:

Driver Option Details

Code	Description
LT1	**LDE1** -Lutron Hi-lume 1% EcoSystem, Soft-on, Fade-to Black Dimming
DA	**DALI**
DMX	**DMX** - Decoder provided by TechoLED, controller by others

Controls Details

Code	Description
RF-D	**RF Wireless** remote controller for tunable white. **Default for tunable white.**
RF-R	**RF Wireless** remote controller for RGB & RGBW. **Default for RGB & RGBW.**
M	**Motion Sensor** - remote, for integral sensor consult factory
BM	**Bluetooth Mesh** Smart Wireless Control by BubblyNet
CS	**Bluetooth Mesh** Smart Wireless Control by Casambi
AWNR	**Lutron Athena** wireless node
AWNS	**Lutron Athena** wireless node with sensor
NL-ES7	**Acuity nLight** – Wired nES7 sensor
NL-AIR	**Acuity nLight** – AIR wireless rES7 sensor
NL-M	**Acuity nLight** - ready, sensor by others

Project:	Type:
	Comments:

Dimension and Mounting

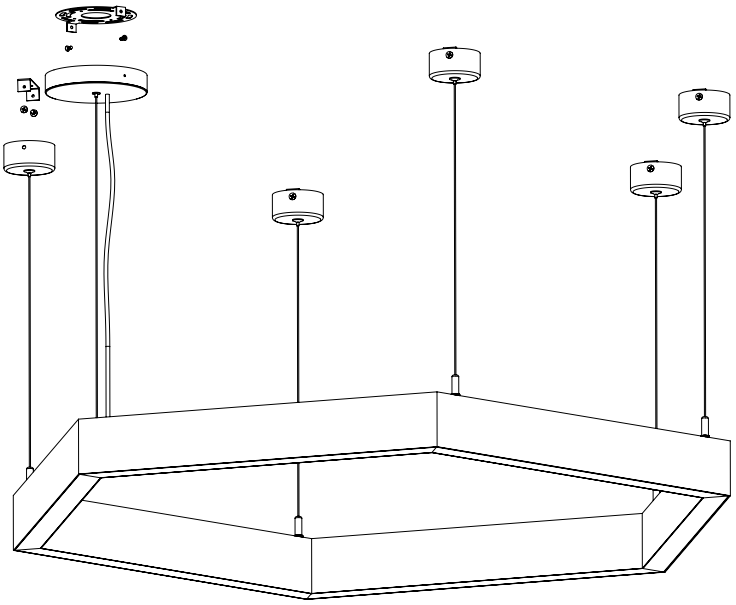

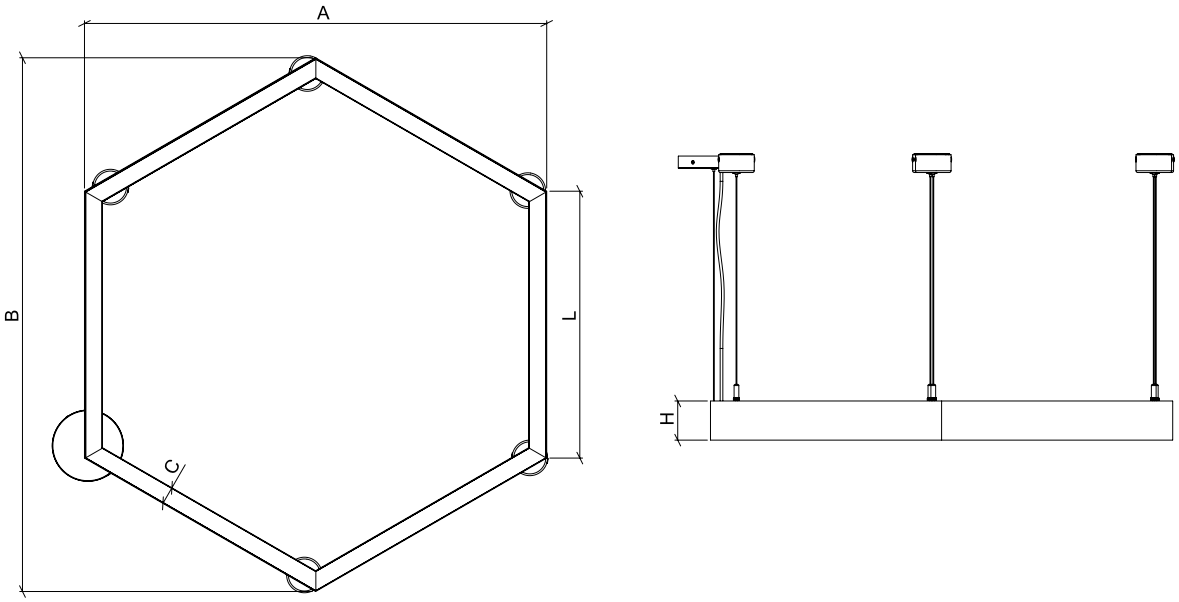

FIXTURE ID	A	B	C	L	H
GSH-D-18-25	16.4"	18.9"	1.97"	9.45"	3"
GSH-D-23-40	20.5"	23.6"	1.97"	11.8"	3"
GSH-D-35-90	30.7"	35.4"	1.97"	17.7"	3"
GSH-D-47-180	40.9"	47.2"	1.97"	23.6"	3"

Project:	Type:
	Comments:

GSH-D-18 (Pendant)

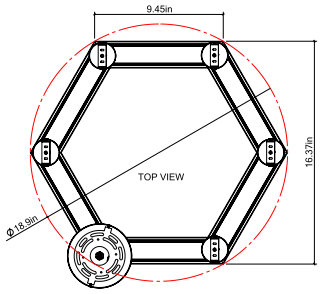

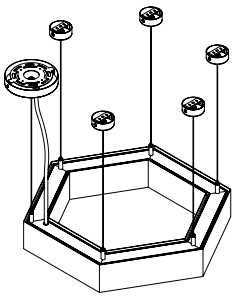

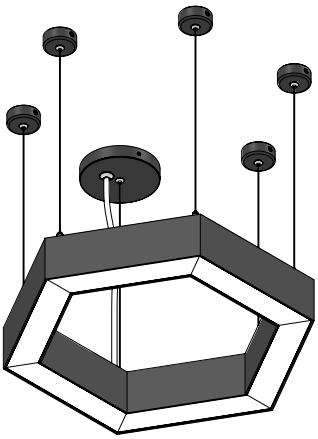

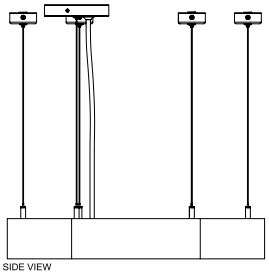

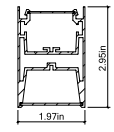

CROSS SECTION A-A
SCALE 1 : 2

GSH-D-18 (Surface)

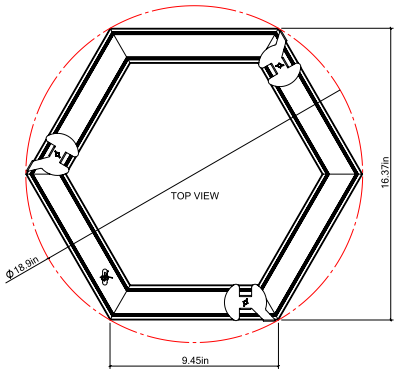

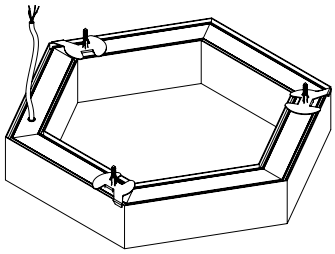

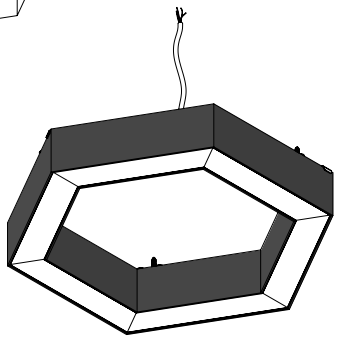

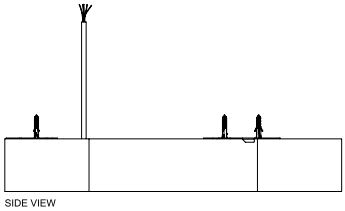

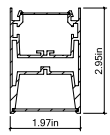

CROSS SECTION A-A
SCALE 1 : 2

Project:	Type:
	Comments:

GSH-D-23 (Pendant)

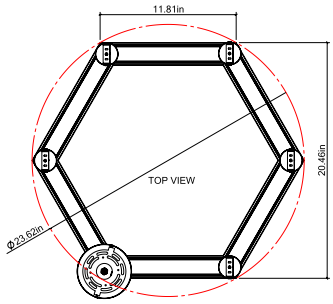

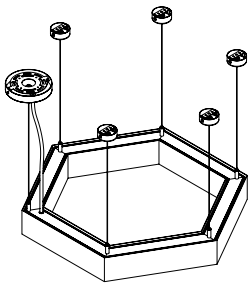

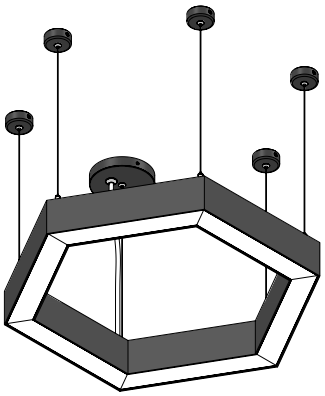

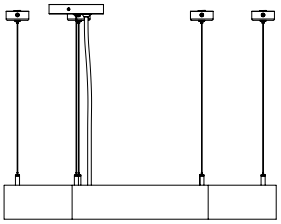

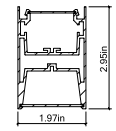

CROSS SECTION A-A
SCALE 1 : 2

GSH-D-23 (Surface)

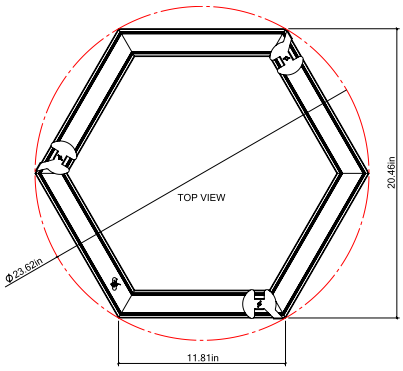

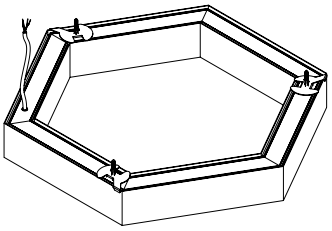

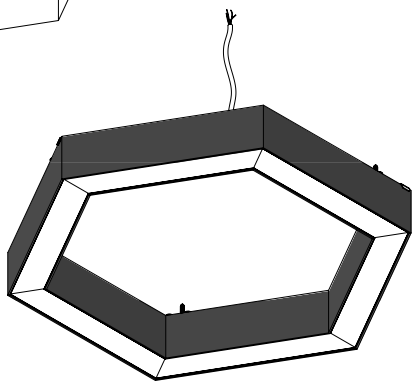

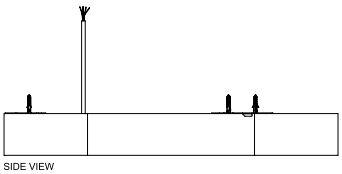

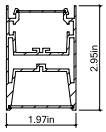

CROSS SECTION A-A
SCALE 1 : 2

Project:	Type:
	Comments:

GSH-D-35 (Pendant)

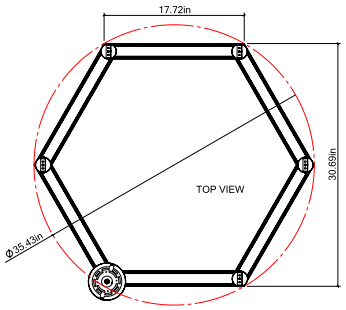

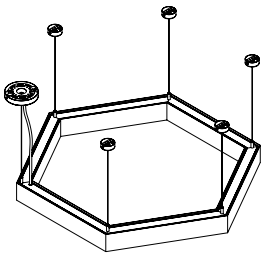

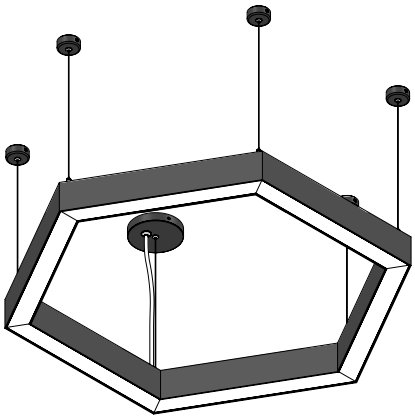

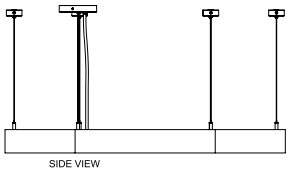

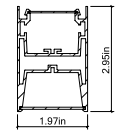

CROSS SECTION A-A
SCALE 1 : 2

GSH-D-35 (Surface)

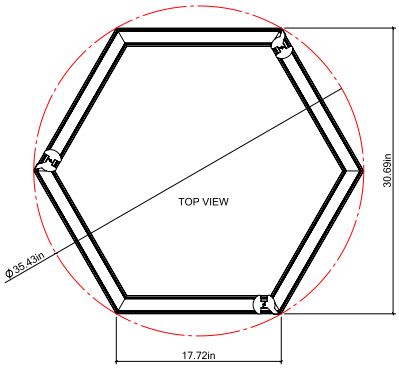

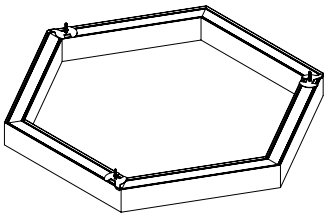

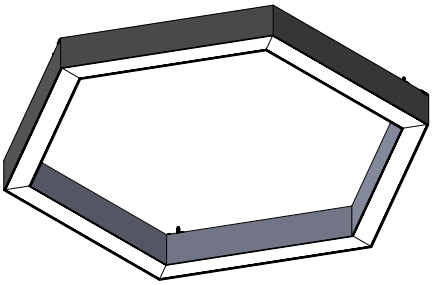

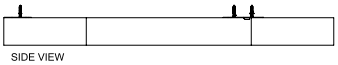

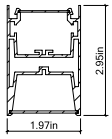

CROSS SECTION A-A
SCALE 1 : 2

Project:	Type:
	Comments:

GSH-D-47 (Pendant)

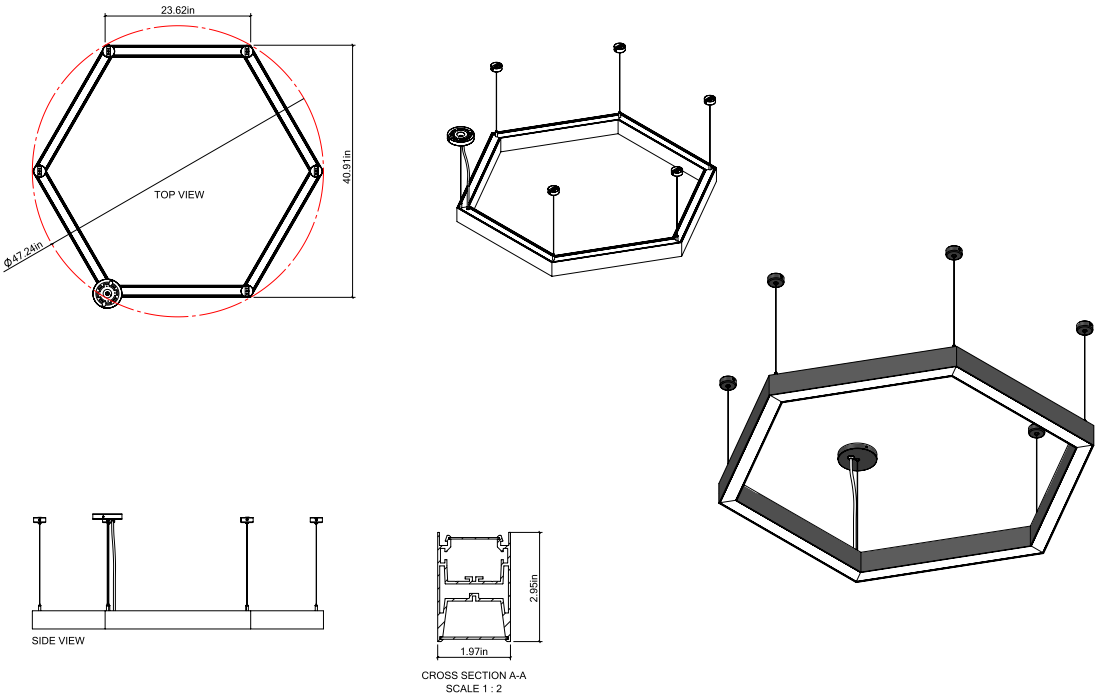

GSH-D-47 (Surface)

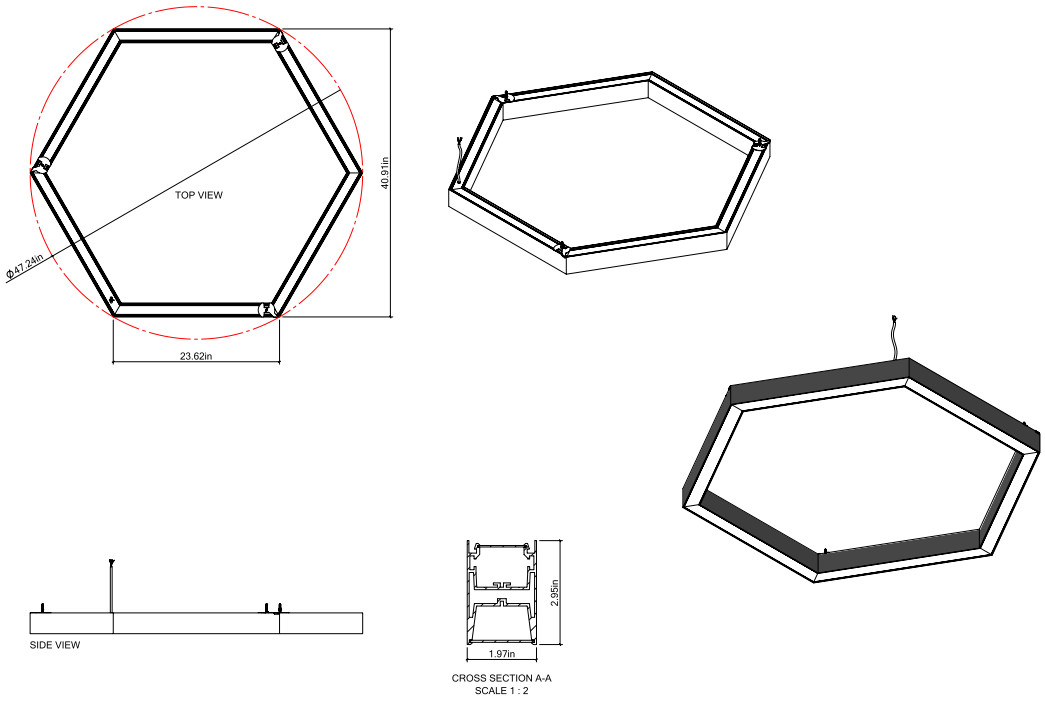

techoLED®
BROOKLYN • NY

GEOMETRIC SERIES - GSH

Rev. Date: 11/25/2026

Project:	Type:
	Comments:

Photometrics

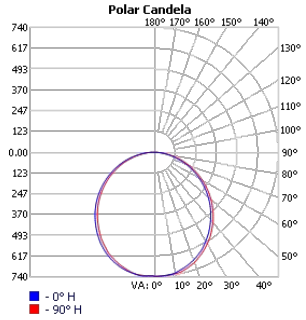

TECHOLED-GSH-D-18-LO-30

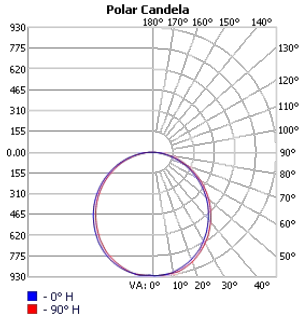

TECHOLED-GSH-D-18-ME-30

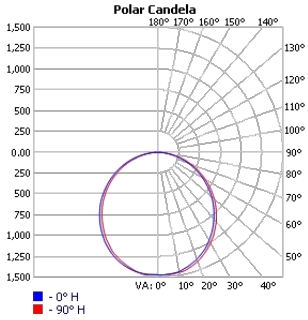

TECHOLED-GSH-D-18-HI-30

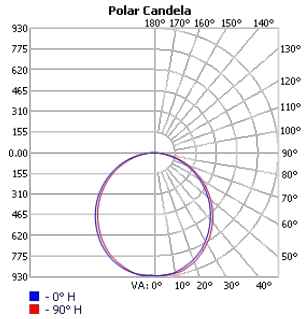

TECHOLED-GSH-D-23-LO-30

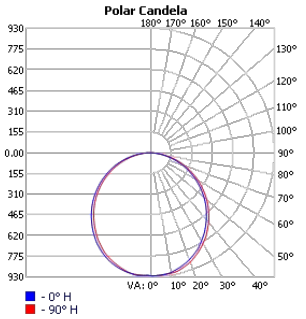

TECHOLED-GSH-D-23-ME-30

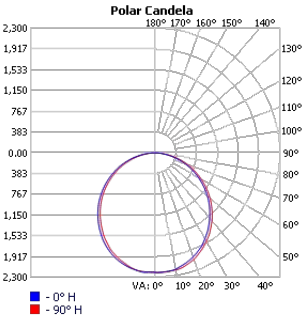

TECHOLED-GSH-D-23-HI-30

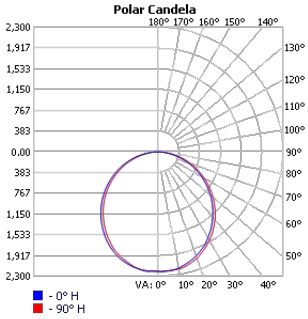

TECHOLED-GSH-D-35-LO-30

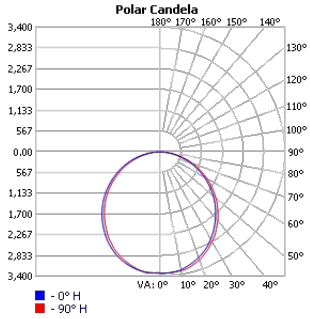

TECHOLED-GSH-D-35-ME-30

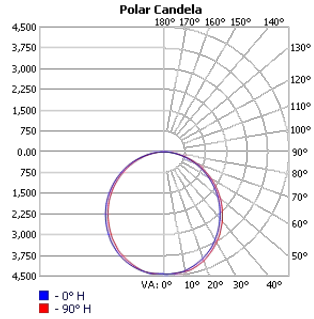

TECHOLED-GSH-D-35-HI-30

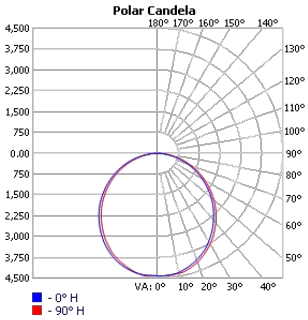

TECHOLED-GSH-D-47-LO-30

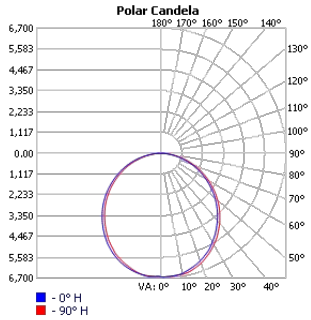

TECHOLED-GSH-D-47-ME-30

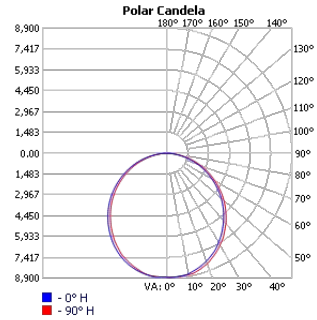

TECHOLED-GSH-D-47-HI-30

techoLED®
BROOKLYN • NY

GEOMETRIC SERIES - GSH

Rev. Date: 11/25/2026

Project:	Type:
	Comments:

Finish Details (powder coat finish)

Standard Colors

W – White


S – Silver


B – Black

Custom Colors


RAL 1003


RAL 2004


RAL 3000


RAL 4001


RAL 5002


RAL 6000


RAL 6038


RAL 7001


RAL 1036


RAL 8029

Any RAL color available, please refer to ralcolorchart.com

Custom Wooden Colors


American Walnut


Cherry


Maple


Light Oak

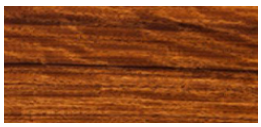
Palisander Santos