techoLED

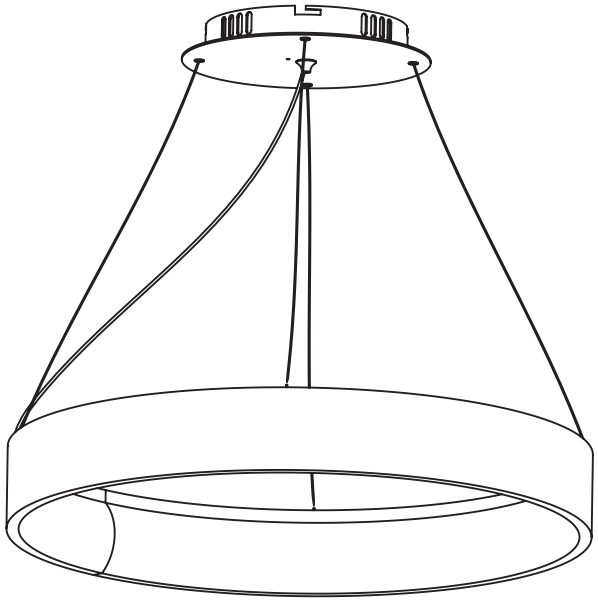

INSTALLATION AND ASSEMBLY INSTRUCTIONS

GSC-SERIES

www.techoled.com | Brooklyn NY

WARNING: Failure to follow instructions could result in damage to product and void warranties!
WARNING: Risk of fire or electrical shock. Disconnect power before installing or servicing.
WARNING: Verify the existing input voltage and ensure it matches input rating on luminaire's product label, located on inside of access cover.
WARNING: Before proceeding, read all instructions carefully to ensure proper and safe installation.
IMPORTANT: This product must be installed in accordance with the applicable installation code by a licensed electrician, familiar with the construction and operation of the product and the hazards involved.

If you have questions or concerns, please reach out to TechoLED at 212-876-5373 or info@techoled.com we are here to help!

PENDANT

1. Relief 4 screws from Canopy side, Rotate Mounting Bracket and take it out from Canopy as below.

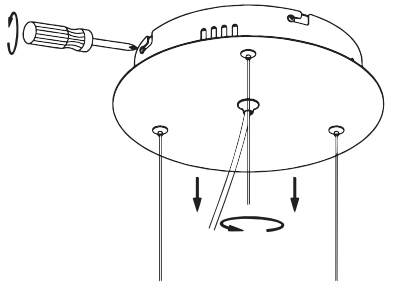

2. Take out Plastic Pin, drill 4 or 6 holes on the ceiling according to Mounting bracket.
note:if the fixture dameter is bigger than 2ft, need holes, 4 for Bracket screw, 2 for safety Bracket screw. Please note safety cable suspension is only applicable for size from diameter of 3ft and above, 2ft and below don't need safety cable suspension. Insert the expansion bolts into the holes. Use 2pcs M4 Screws to fix Mounting Bracket with J-Box.

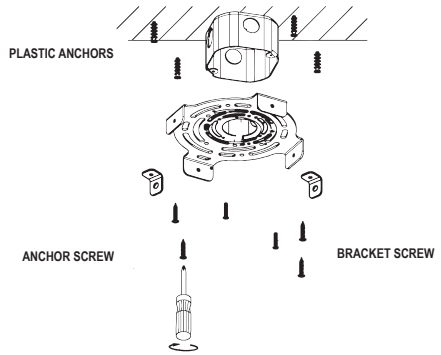

3. Use 4pcs or 6 pcs(2 for Safe Bracket) M4 Self-Tapping screw to fix Mounting Bracket on the ceiling. and Connect the safety chain between Mounting Bracket and Canopy.

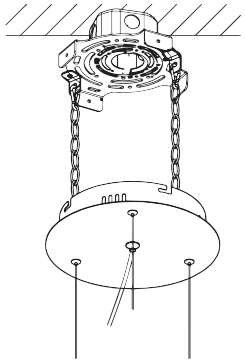

Attention: You must secure mounting plate at all connection points (junction box plus four outer points for small and medium size, or six outer points for large size) to support fixture weight appropriately. Not using all mounting points could damage the fixture and void product warranty.

PENDANT

4. Use wire connectors to connect L,N,G,DIM+,DIM- wires. When finished, Put all Wires with connector into J-Box

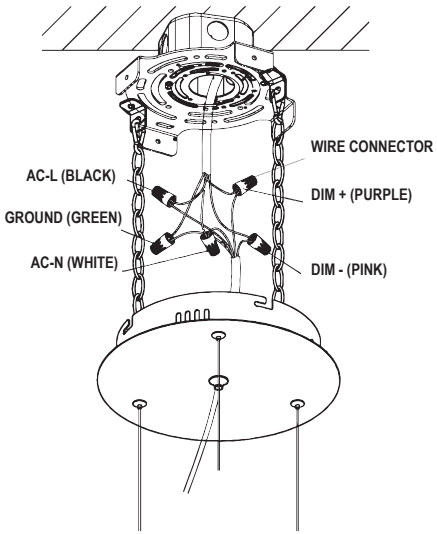

5. Keep the Slot hole as vertical line with Side screw, put the lamp body upward. And make screw into slot, rotate Canopy and make Mounting Bracket and Canopy fixed.

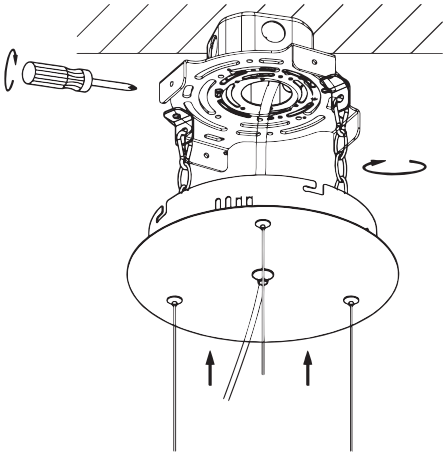

SURFACE MOUNT

1. Remove canopy screws

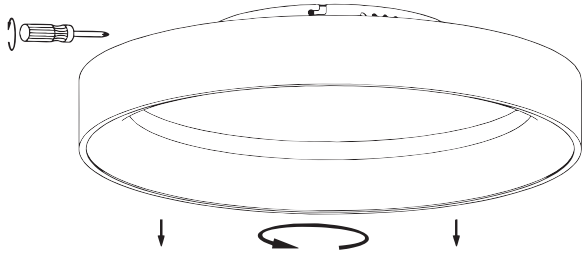

2. Secure bracket to the ceiling

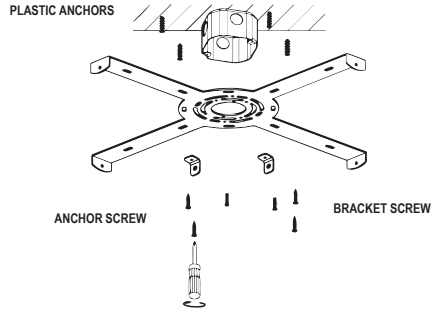

3. Connect the safety chain between Mounting Bracket and Canopy.

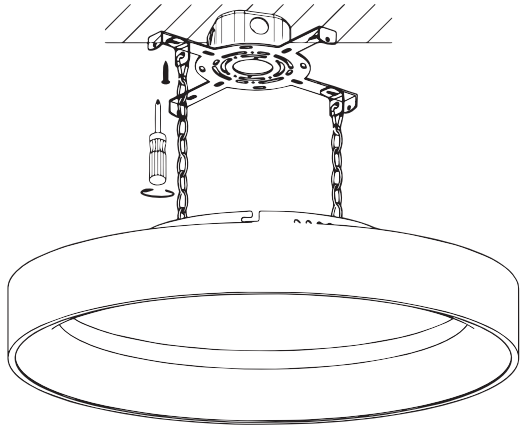

SURFACE MOUNT

4. Use wire connectors to connect L,N,G,DIM+,DIM- wires. When finished, Put all Wires with connector into J-Box

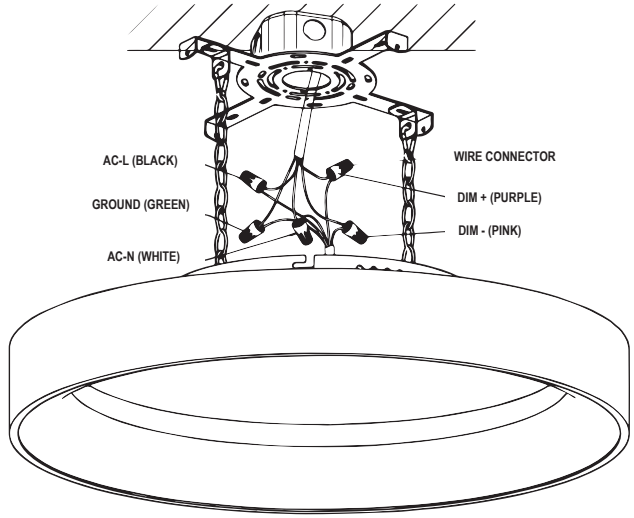

4. Fix canopy to the mounting bracket

