techoLED

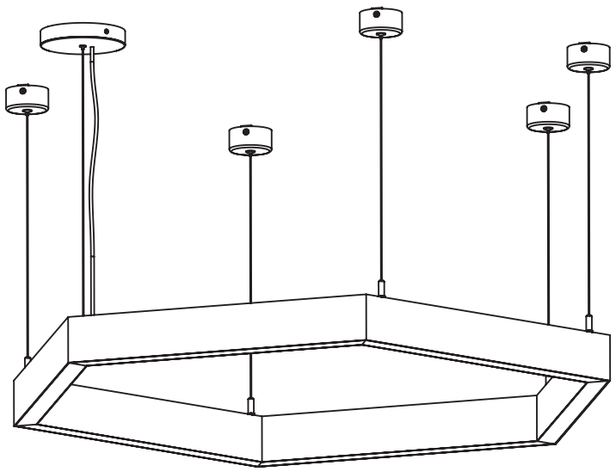

INSTALLATION AND ASSEMBLY INSTRUCTIONS

GSH-SERIES

WARNING: Failure to follow instructions could result in damage to product and void warranties!
WARNING: Risk of fire or electrical shock. Disconnect power before installing or servicing.
WARNING: Verify the existing input voltage and ensure it matches input rating on luminaire‘s product label, located on inside of access cover.
WARNING: Before proceeding, read all instructions carefully to ensure proper and safe installation.
IMPORTANT: This product must be installed in accordance with the applicable installation code by a licensed electrician, familiar with the construction and operation of the product and the hazards involved.

www.techoled.com | Brooklyn NY

If you have questions or concerns, please reach out to TechoLED at 212-876-5373 or info@techoled.com we are here to help!

PENDANT DIRECT SUSPENSION

PENDANT:
1. CANOPY 2. AC INPUT

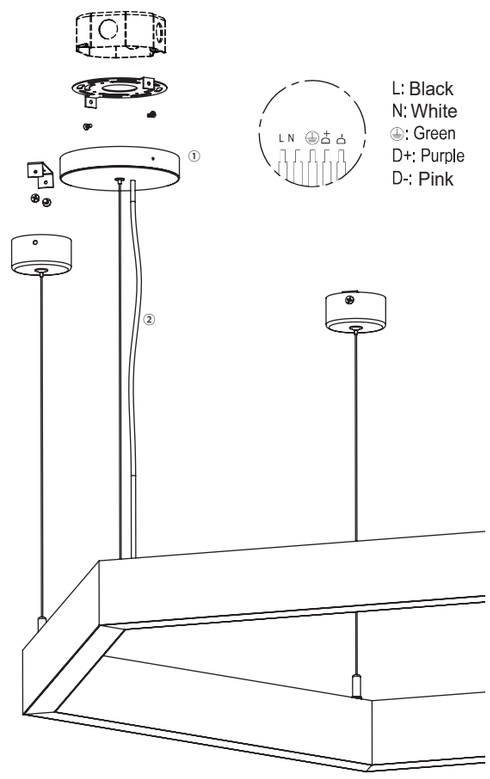

1. Install canopy bracket to J box using screws
2. Attach power canopy plate to canopy bracket using tighten
3. Install Fixture clip anchor to clip using nut
4. For non power canopy, attach mounting bracket directly to ceiling and follow step 2-3 above.
5. Connect power to driver according towiring diagram.

PENDANT CENTRAL CANOPY

1. Relief 4 screws from Canopy side, Rotate Mounting Bracket and take it out from Canopy as below.

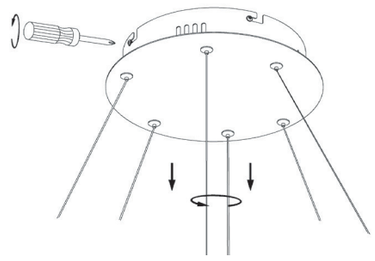

2. Take out the plastic anchors. Drill four 8 mm diameter holes in the ceiling according to the position of the mounting bracket. Insert the plastic anchors into the holes. Use two J-Box screws to attach the mounting bracket to the J-Box.

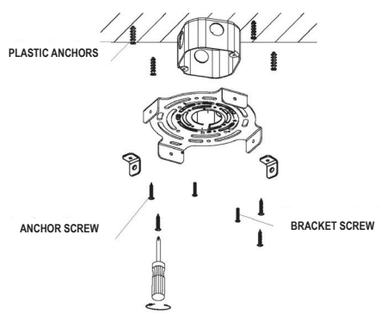

NOTE: Secure the mounting plate at all connection points (the junction box and four outer points for small and medium sizes, or six outer points for large sizes) to properly support the fixture's weight. Failure to use all mounting points may damage the fixture and void the product warranty.

PENDANT CENTRAL CANOPY

3. Connect the Driver 1(+) and (−), Driver 2(+) and (−) wires using wire connectors. After completing the connections, place all wires with connectors into the J-Box.

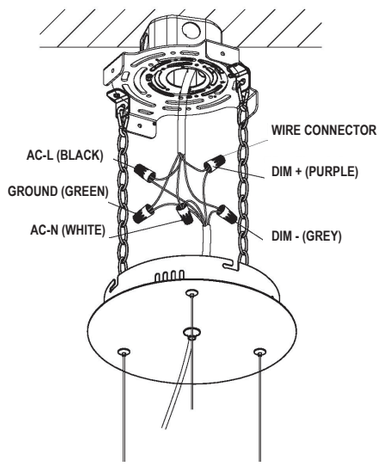

4. Adjust the power and aircraft cable lengths to the desired suspension height. Fasten cables to the mounting bracket and canopy using locking screws and pins. Confirm tension and uniformity before releasing slack.



5. Turn the power back on at the fuse box.

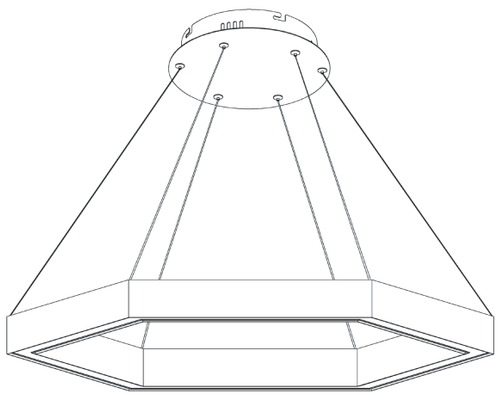

SURFACE MOUNT

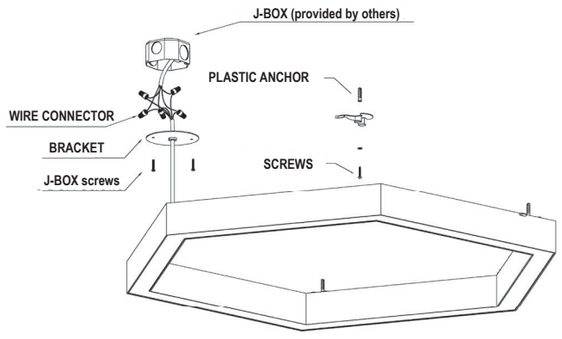

1.Mark points on the ceiling according to the mounting pin and canopy location.

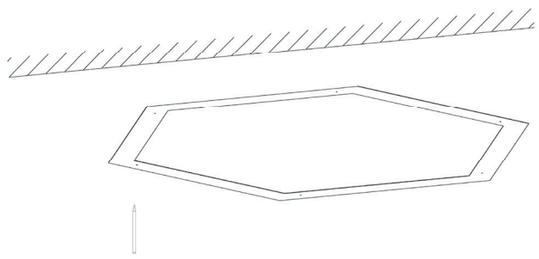

2.Remove the plastic pin and drill six 8mm diameter holes in the ceiling according to the mounting bracket.Insert expansion bolts into the holes.
Use two screws to fix the mounting bracket with the J-Box, as shown in the picture.

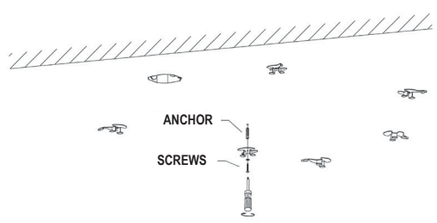

SURFACE MOUNT

Attention: You must secure the mounting plate at all connection points (junction box plus four outer points for small and medium sizes, or eight outer points for large sizes) to properly support the fixture's weight. Not using all mounting points could damage the fixture and void the product warranty

3.Use wire connectors to connect the L (black), N (white), G (green), DIM+ (purple), and DIM- (pink) wires. After connecting, put all wires with connectors into the J-Box

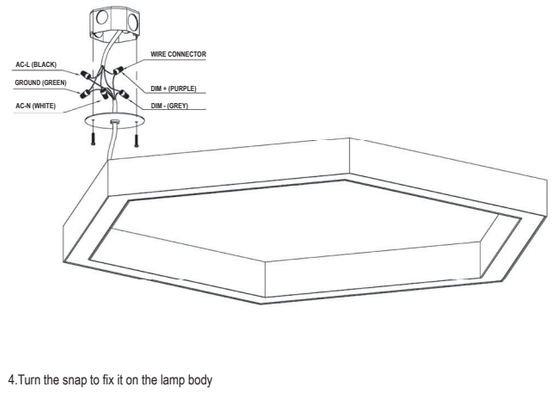

4.Turn the snap to fix it on the lamp body

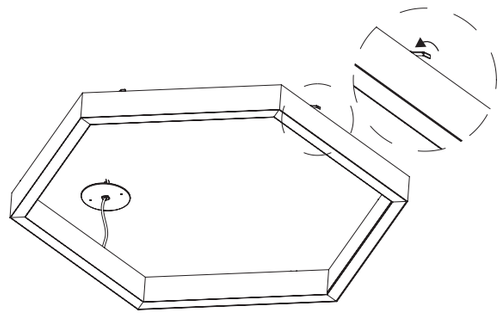

5.After completing the installation, turn on the electricity at the main fuse box. The lighting should now work.

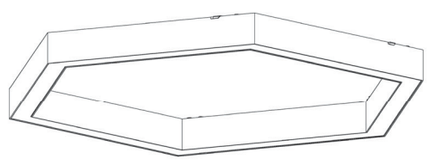

GSH-SERIES

www.techoled.com | Brooklyn NY